Olitech Electronics Co. Ltd

Email: info@olitech-elec.com Website: www.olitech-elec.com

Lead Zinc Oxide Varistor 20D serie

Description

The 12D series radial leaded varistors provides an ideal circuit protection solution for lower DC voltage applications by offering higher surge ratings than ever before available in such small discs.

The maximum peak surge current rating can reach up to 10 KA(8/20 μs pulse) to protect against high peak surges, including indirect lightning strike interference, system switching transients and abnormal fast transients from the power source.

Features

- Wide operating voltage (V_{1mA}) range from 8V to 1800V
- Fast responding to transient over-voltage
- Large absorbing transient energy capability
- Low clamping ratio and no follow-on current
- Safety certification: UL & VDE
- Operating Temperature：-40 ℃ ~ +85 ℃
- Storage Temperature：-40 ℃ ~ +125 ℃
- According to UL 94 V-0 standards

Applications

- Transistor, diode, IC, thyristor or triac semiconductor protection
- Surge protection in consumer electronics
- Surge protection in industrial electronics
- Surge protection in electronic home appliances, gas and pet roleum appliances
- Relay and electromagnetic valve surge absorption

Part Number Code

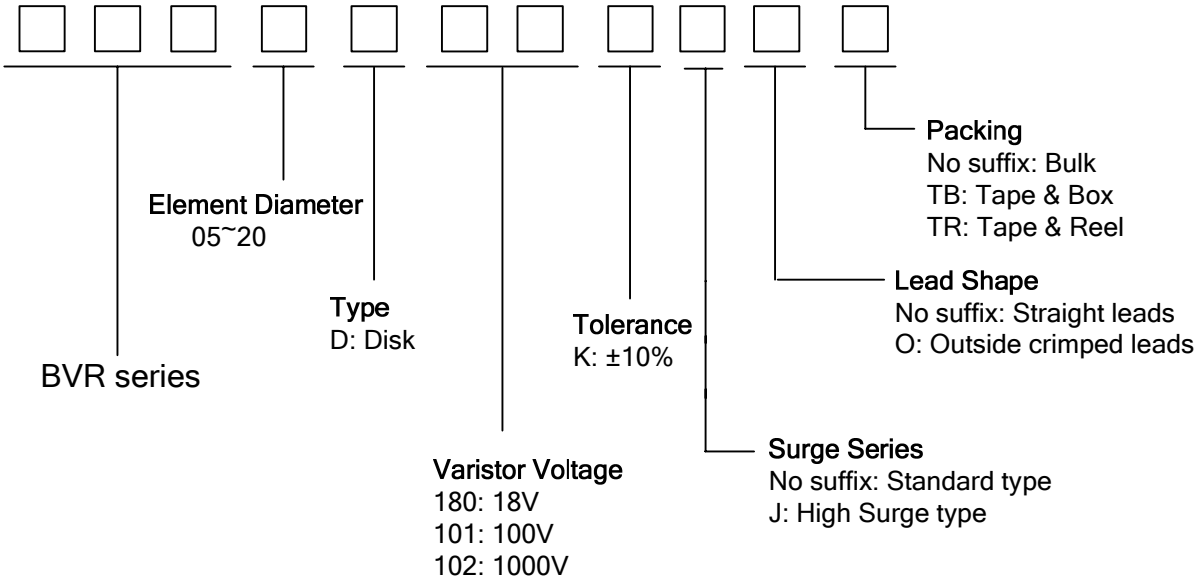

Olitech Electronics Co. Ltd

Email: info@olitech-elec.com Website: www.olitech-elec.com

Lead Zinc Oxide Varistor 20D serie

Dimensions (Pls see table)

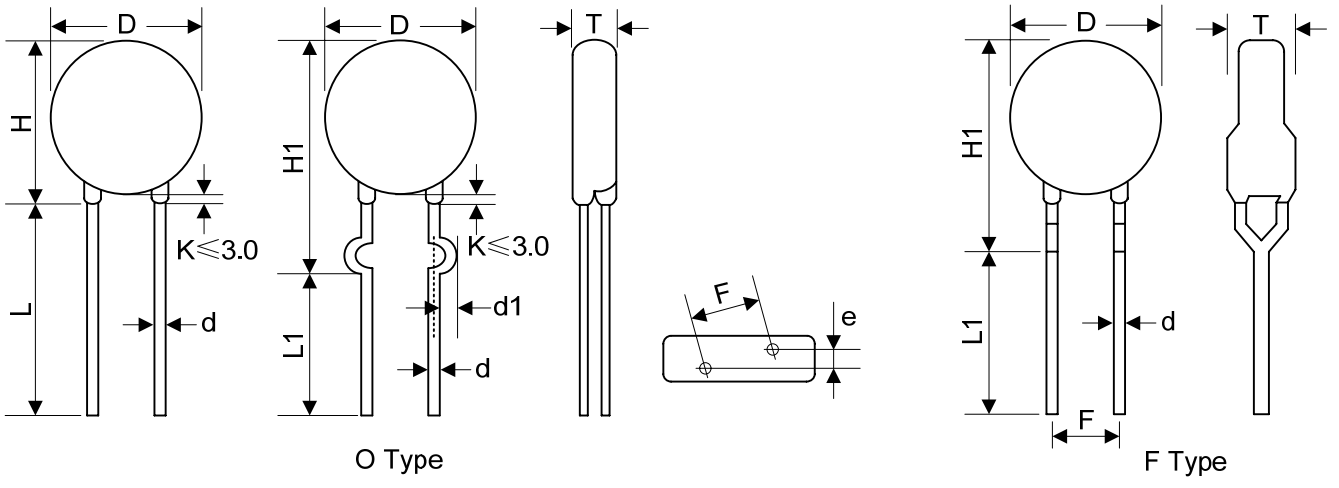

Table 1	
	Unit: mm
Symbol	Dimension
H	21.0~26.0
H1	24.0~28.0
L(min.)	20.0
L1(min.)	15.0
D	20.0~23.0
F	7.5±0.8/10.0±1.0
T	Table 2
e(±0.8)	Table 2
d(±0.05)	0.8/1.0
d1(±0.4)	1.4/1.6

Table 2

Unit: mm

Model	T	e	Model	T	e
180K	2.1~4.3	1.7	361K	3.0~5.4	2.9
220K	2.2~4.4	1.8	391K	3.1~5.5	3.0
270K	2.2~4.6	2.0	431K	3.3~5.7	3.2
330K	2.3~4.8	1.9	471K	3.4~6.0	3.4
390K	2.2~4.5	2.0	511K	3.5~6.2	3.6
470K	2.3~4.7	2.1	561K	3.7~6.5	3.8
560K	2.4~5.0	2.3	621K	3.9~6.8	4.1
680K	2.5~5.3	2.6	681K	4.1~7.1	4.4
820K	2.2~4.5	2.0	751K	4.4~7.5	4.5
101K	2.5~4.6	2.2	781K	4.5~7.7	4.6
121K	2.5~4.8	2.4	821K	4.7~7.9	4.8
151K	2.3~4.5	2.0	911K	4.9~8.1	5.2
181K	2.4~4.6	2.1	102K	5.5~8.6	5.2
201K	2.5~4.7	2.2	112K	5.9~9.1	5.6
221K	2.6~4.8	2.3	122K	6.0~9.7	6.0
241K	2.7~4.9	2.4	142K	7.0~11.2	6.8
271K	2.7~5.0	2.6	162K	7.5~11.8	7.6
301K	2.8~5.0	2.7	182K	7.7~12.8	8.4
331K	2.8~5.2	2.7			

Olitech Electronics Co. Ltd

Email: info@olitech-elec.com Website: www.olitech-elec.com

Lead Zinc Oxide Varistor 20D series

Electrical Characteristics

Type Number		Maximum Allowable voltage		Varistor Voltage	Maximum Clamping Voltage		Withstanding Surge Current				Maximum Energy (10/1000μs)		Rated Power	Typical Capacitance (Reference)
Standard	High Surge	V_{AC} (V)	V_{DC} (V)	V1mA (V)	I_P (A)	V_C (V)	I(A) Standard 1 Time	I(A) Standard 2 Time	I(A) High Surge 1 Time	I(A) High Surge 2 Times	(J) Standard	(J) High Surge	(W)	@1KHZ (pf)
20D180K	20D180KJ	11	14	18(15~21.6)	20	36	2000	1000	3000	1000	11	13	0.2	28500
20D220K	20D220KJ	14	18	22(19.5~26)	20	43	2000	1000	3000	1000	14	16	0.2	18500
20D270K	20D270KJ	17	22	27(24~30)	20	53	2000	1000	3000	1000	16	19	0.2	13000
20D330K	20D330KJ	20	26	33(29.5~36.5)	20	66	2000	1000	3000	1000	23	24	0.2	11500
20D390K	20D390KJ	25	31	39(35~43)	20	77	2000	1000	3000	1000	26	28	0.2	8500
20D470K	20D470KJ	30	38	47(42~54)	20	93	2000	1000	3000	1000	30	34	0.2	7400
20D560K	20D560KJ	35	45	56(50~62)	20	100	2000	1000	3000	1000	41	41	0.2	6500
20D680K	20D680KJ	40	56	68(61~75)	20	135	2000	1000	3000	1000	46	49	0.2	5800
20D820K	20D820KJ	50	65	82(74~90)	100	135	6500	4000	10000	7000	38	56	1.0	4900
20D101K	20D101KJ	60	85	100(90~110)	100	165	6500	4000	10000	7000	45	70	1.0	4000
20D121K	20D121KJ	75	100	120(108~132)	100	200	6500	4000	10000	7000	55	85	1.0	3300
20D151K	20D151KJ	95	125	150(135~165)	100	250	6500	4000	10000	7000	70	106	1.0	2700
20D181K	20D181KJ	115	150	180(162~198)	100	300	6500	4000	10000	7000	85	130	1.0	2200
20D201K	20D201KJ	130	170	200(180~220)	100	340	6500	4000	10000	7000	95	140	1.0	2000
20D221K	20D221KJ	140	180	220(198~242)	100	360	6500	4000	10000	7000	100	155	1.0	1800
20D241K	20D241KJ	150	200	240(216~264)	100	395	6500	4000	10000	7000	108	168	1.0	1650
20D271K	20D271KJ	175	225	270(243~297)	100	455	6500	4000	10000	7000	127	190	1.0	1500
20D301K	20D301KJ	190	250	300(270~330)	100	500	6500	4000	10000	7000	136	210	1.0	1300
20D331K	20D331KJ	210	275	330(297~363)	100	550	6500	4000	10000	7000	150	228	1.0	1200
20D361K	20D361KJ	230	300	360(324~396)	100	595	6500	4000	10000	7000	163	255	1.0	1100
20D391K	20D391KJ	250	320	390(351~429)	100	650	6500	4000	10000	7000	180	275	1.0	1000
20D431K	20D431KJ	275	350	430(387~473	100	710	6500	4000	10000	7000	190	305	1.0	930
20D471K	20D471KJ	300	335	470(423~517)	100	775	6500	4000	10000	7000	220	350	1.0	850
20D511K	20D511KJ	320	415	510(459~561)	100	845	6500	4000	10000	7000	220	360	1.0	780
20D561K	20D561KJ	350	460	560(504~616)	100	925	6500	4000	10000	7000	220	380	1.0	710
20D621K	20D621KJ	385	505	620(558~682)	100	1025	6500	4000	10000	7000	220	390	1.0	650
20D681K	20D681KJ	420	560	680(612~748)	100	1120	6500	4000	10000	7000	230	400	1.0	600
20D751K	20D751KJ	460	615	750(675~825)	100	1240	6500	4000	10000	7000	255	420	1.0	530
20D781K	20D781KJ	485	640	780(702~858)	100	1290	6500	4000	10000	7000	265	440	1.0	510
20D821K	20D821KJ	510	670	820(738~902)	100	1355	6500	4000	10000	7000	282	460	1.0	500
20D911K	20D911KJ	550	745	910(819~1001)	100	1500	6500	4000	10000	7000	310	510	1.0	440
20D102K	20D102KJ	625	825	1000(900~1100)	100	1650	6500	4000	10000	7000	342	565	1.0	400
20D112K	20D112KJ	680	895	1100(990~1210)	100	1814	6500	4000	10000	7000	383	620	1.0	460
20D122K	20D122KJ	750	990	1200(1080~1320)	100	1980	6500	4000	10000	7000	408	660	1.0	320
20D182K	20D182KJ	1000	1465	1800(1620~1980)	100	2970	6500	4000	10000	7000	625	660	1.0	320

Lead Zinc Oxide Varistor 20D serie

	编号 NO.	项目 Item	性能要求 capability Requirements	说明及测试方法 Illustrate and test methods
电气性能(Electrical performance)	6	标准测试条件 Standard test conditions	—	除非另有规定，所有项目的测试应在以下环境条件下进行：温度： 5～35℃，相对湿度：45～85%RH Unless otherwise stated, all items of the test should be carried out under the following environmental conditions: Temperature: 5 ~ 35 ℃, relative humidity: 45 ~ 85% RH
	7	最大持续工作电压 Maximum continuous operating voltage	交流(AC):420V_{RMS} 直流(DC):560V	压敏电阻能够长期承受的最大持续正弦交流电压有效值或最大直流电压。 Varistor can be sustained long-term maximum exposure or maximum sinusoidal RMS AC voltage DC voltage.
	8	压敏电压 Varistor voltage	U_{1mA} =612~748V	压敏电阻中流 1mA 直流电流时，压敏电阻两电极间的电压。 Varistor stream 1mA DC current, the varistor voltage between two electrodes.
	9	漏电流 Leakage current	≤ 10 μA	两端被施加最大持续直流工作电压时，流过压敏电阻的电流。 Maximum continuous DC is applied at both ends of operating voltage, the current flowing through the varistor.
	10*	电压温度系数 Voltage temperature coefficient	-0.05 % ~ 0 % /℃	$\frac{U_{1mA}(85℃)-U_{1mA}(25℃)}{U_{1mA}(25℃)}\times\frac{1}{60}\times 100$ (%)
	11	限制电压 Clamping voltage	1120V	波形为 8/20μs、峰值为 100A 的浪涌电流流入压敏电阻器时，两电极间的电压峰值。 Waveform 8/20μs, 100A peak inrush current into the varistor, the two peak voltage between the electrodes.

	编号 NO.	项目 Item	性能要求 capability Requirements	说明及测试方法 Illustrate and test methods
	12	最大峰值电流 Maximum peak current	6500 A	压敏电阻能够承受的波形为 8/20μs 的最大浪涌电流峰值。“能够承受”指：冲击后的压敏电压 U_{1mA} 与冲击前的相比不大于±10%，且不能发生目视可见的机械损伤。 Varistor can withstand the wave to the maximum inrush current peak 8/20μs. "withstand"means: after the impact and shock U_{1mA} varistor voltage compared to no more than before ± 10%, and can not visually visible mechanical damage occurred.
	13*	额定功率 及 脉冲电流稳定性 Rated Power and Pulse current stability	1.0W and 10^4 times	在波形为 8/20μs、峰值为 250A、时间间隔为 6.22 sec、次数为 10^4 的电流脉冲群作用下，压敏电阻器能承受最大平均功率。“能够承受”指：冲击后的压敏电压 U_{1mA} 与冲击前的相比不大于±10%，且不能发生目视可见的机械损伤。 In the waveform 8/20μs, the peak for the 250A, the time interval of 4.3 sec, 10^4 times under the current burst, varistor can withstand the maximum average power. "withstand" means : after the impact and shock U_{1mA} varistor voltage compared to no more than before ± 10%, and can not visually visible mechanical damage occurred.
	14	最大能量 Maximum energy	230J	对压敏电阻施加一次 10/1000μs 方波电流时，它能够承受最大浪涌能量。“能够承受”指：冲击后的压敏电压 U_{1mA} 与冲击前的相比不大于±10%，且不能发生目视可见的机械损伤。 Imposed on a 10/1000μs varistor square wave current, it can withstand the maximum surge energy. "withstand" means : after the impact and shockU_{1mA} varistor voltage compared to no more than before ± 10%, and can not visually visible mechanical damage occurred.
	15	电容量 Capacitance	460pF (参考值 Reference)	频率（Frequency）：1kHz±10%、 信号电平（Signal level）≤1V_{RMS} 、零偏压（Zero bias）.
环境特性(Environmental Characteristics)	16*	气候顺序 Climatic sequence	$\frac{\Delta U_{1mA}}{U_{1mA}}\le\pm5\%$ 无明显机械损伤 not visually visible mechanical damage	IEC 68-2-4, 试验 Db 干热： (85±2℃)×16hrs, 循环湿热：一个循环(55±2℃)×24hrs、 95~100%RH 寒冷：(-40±2℃)×2hrs, 循环湿热：一次(55±2℃) ×24hrs,、95~100%RH、循环 1 次，24hrs/循环。 IEC 68-2-4, Test Db Dry Heat: (85 ± 2 ℃) × 16hrs, Damp heat, cyclic: a loop (55 ± 2 ℃) × 24hrs, 95 ~ 100% RH Cold: (-40 ± 2 ℃) × 2hrs, Damp heat, cyclic: one (55 ± 2 ℃) × 24hrs,, 95 ~ 100% RH, the remaining 5 cycles, 24hrs / cycle.
	17*	稳态湿热 Steady-state heat	$\frac{\Delta U_{1mA}}{U_{1mA}}\le\pm5\%$ 无明显机械损伤 not visually visible mechanical damage	IEC68-2-3 温度/时间：(40±2℃)/500hrs、湿度：90~95%RH。 IEC68-2-3 Temperature / time: (40 ± 2 ℃) / 500hrs, Humidity: 90 ~ 95% RH.

Lead Zinc Oxide Varistor 20D serie

	编号 NO.	项目 Item	性能要求 capability Requirements	说明及测试方法 Illustrate and test methods
	18*	温度快速变化 Rapid change of temperature	$\frac{\Delta U_{1mA}}{U_{1mA}} \le \pm 5\%$ 无明显机械损伤 not visually visible mechanical damage	IEC 68-2-14, 试验 Na T_A=- 40℃，T_B= +85℃；共五个循环，每个极限温度下放置 30 分钟。 IEC 68-2-14, Test Na T_A=- 40℃，T_B= +85℃； a total of five cycles, each extreme temperature for 30 minutes.
	19*	上限类别温度耐久性 Durability of Upper category temperature	$\frac{\Delta U_{1mA}}{U_{1mA}} \le \pm 10\%$ 无明显机械损伤 not visually visible mechanical damage	IEC 68-2-2 温度：85℃±2℃、时间：1000hrs。 电压：最大持续工作电压。 IEC 68-2-2 Temperature: 85 ℃ ± 2 ℃, time: 1000hrs. Voltage: The maximum continuous operating voltage.
	20*	湿热环境耐久性 Durability of hot and humid environment	$\frac{\Delta U_{1mA}}{U_{1mA}} \le \pm 10\%$ 无明显机械损伤 not visually visible mechanical damage	IEC68-2-3 温度：40℃±2℃、时间：500hrs、湿度：90~95%RH。 电压：最大持续工作电压的 10%。 IEC68-2-3 Temperature: 40 ℃ ± 2 ℃, time: 500hrs, Humidity: 90 ~ 95% RH. Voltage: The 10% of the maximum continuous operating voltage (AC).
机械特性(Mechanical Characteristics)	21*	振动 Vibration	$\frac{\Delta U_{1mA}}{U_{1mA}} \le \pm 5\%$ 无明显机械损伤 not visually visible mechanical damage	IEC68-2-6, 试验 Fc 方法 B4 频率范围：10 Hz～55 Hz、振幅：0.75mm 或加速度 98 m/s^2 总持续时间：6hrs(三个方向，每方向各 2hrs)。 IEC68-2-6, Fc test method B4 Frequency range: 10 Hz ~ 55 Hz, amplitude: 0.75mm or acceleration 98 m/s^2 total duration: 6hrs (three directions, each direction of each 2hrs).
	22*	冲击 Impact	$\frac{\Delta U_{1mA}}{U_{1mA}} \le \pm 5\%$ 无明显机械损伤 not visually visible mechanical damage	IEC 68-2-27, Test Ea 脉冲波形：半正弦波、加速度：490m/s^2 脉冲宽度：11ms，三个方向，每方向各 6 次。 IEC 68-2-27, Test Ea Pulse waveform: half sine, acceleration: 490 m/s^2 Pulse width: 11ms, three directions, each direction of the 6 times.
	23*	可焊性 Solderability	浸渍部分的 95%被焊锡覆盖 95% of dipping part of the solder coverage	IEC 68-2-20, 试验 Ta 方法 1 槽温：235±5℃ 浸渍时间：2±0.5sec IEC 68-2-20, Test Ta method 1 Bath temperature: 235 ± 5 ℃ Soaking time: 2 ± 0.5sec
	24*	耐焊接性 Soldering endurance	$\frac{\Delta U_{1mA}}{U_{1mA}} \le \pm 5\%$ 无明显机械损伤 not visually visible mechanical damage	IEC 68-2-20, 试验 Tb 方法 1A 锡温： 260℃、持续时间：5sec IEC 68-2-20, Test Tb Method 1A Solder temperature: 260 ℃, duration: 5sec

	编号 NO.	项目 Item	性能要求 capability Requirements	说明及测试方法 Illustrate and test methods
	25*	引出端强度 Terminal Strength	$\frac{\Delta U_{1mA}}{U_{1mA}} \le \pm 5\%$ 无明显机械损伤 not visually visible mechanical damage	IEC68-2-21, 试验 Ua 拉伸－ 力量： 10 N (ø 0.6 和 ø 0.8mm 引线)、 20N(ø 1.0mm 引线) 持续时间： 10 sec. 弯折－ 力量： 5 N (ø 0.6 和 ø 0.8mm 引线)、 10N(ø 1.0mm 引线) 弯折次数：2 次 IEC68-2-21, Test Ua Stretch - Strength: 10 N (ø 0.6 and ø 0.8mm lead), 20N (ø 1.0mm lead) Duration: 10 sec. Bending - Strength: 5 N (ø 0.6 and ø 0.8mm lead), 10N (ø 1.0mm lead) Bending: 2 times
总体特性(Total Characteristics)	26*	使用温度范围 Operating temperature range	-40℃ ～ + 85℃	压敏电阻无须降额使用的温度范围 Varistor without derating temperature range
	27*	贮存温度范围 Storage temperature range	-40℃ ～ + 125℃	压敏电阻无负载情况下 Varistors under no load
	28	绝缘耐压 Insulation	⩾2500VAC	压敏电阻的电极引线与其包封层表面之间，1 min。 Varistor electrode lead between the surface and its encapsulation, 1 min.

Lead Zinc Oxide Varistor 20D serie

伏安特性曲线

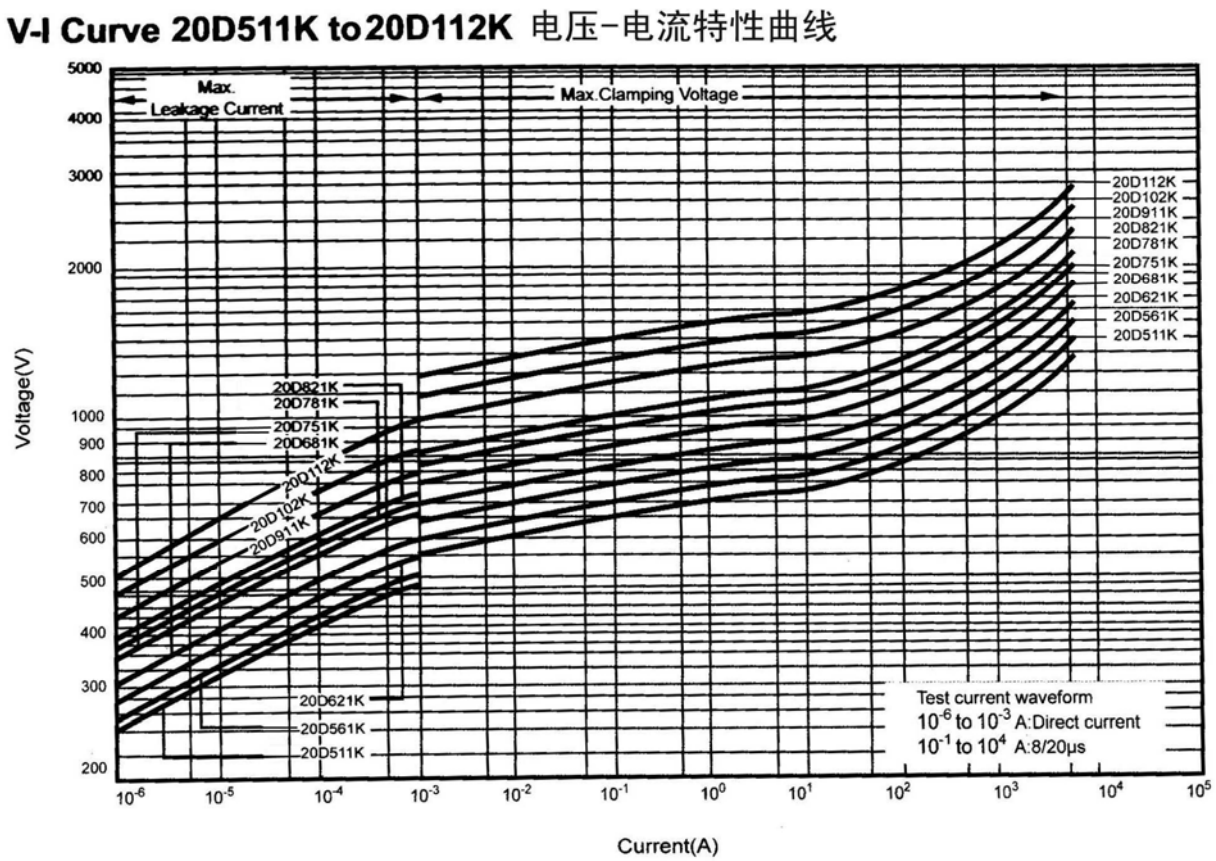

温度降额曲线

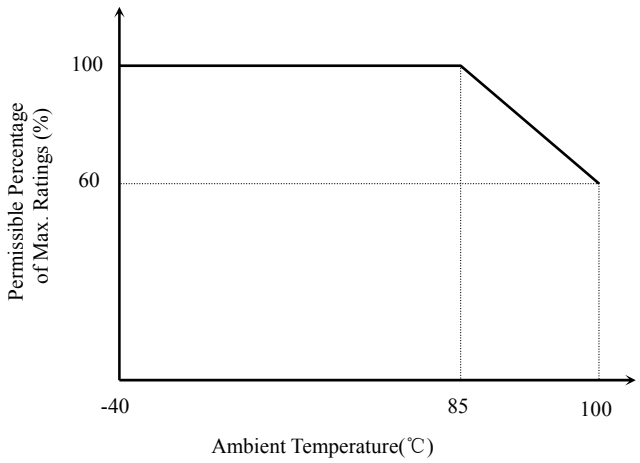

脉冲电流降额曲线

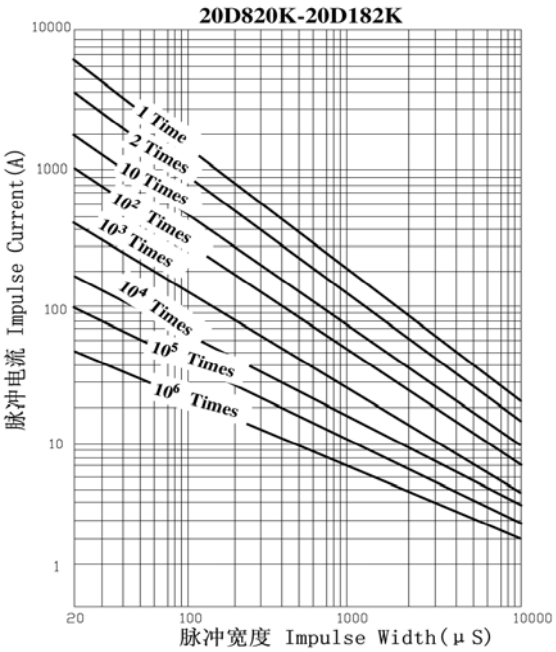

注： 编号带有星号(*)的项目属可靠性试验。

Note: The numbers with an asterisk (*) project is a reliability test.

Olitech Electronics Co. Ltd

Email: info@olitech-elec.com Website: www.olitech-elec.com

Package Bulk packing

1、Inner bag packing

Outlook	Bag material	Size (mm)		Packing Qty (pcs)
		L	W	
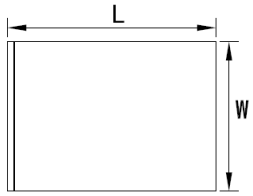	Plastic bag	210	200	*

2、 Inner box packing

Outlook		(mm)			(Box)
		L	W	H	
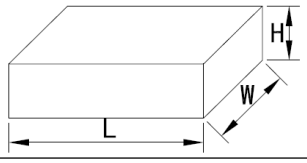	Paper box	245	165	67	2

3、 Outside carton packing

Outlook	Material	Size (mm)			Packing Qty (Carton)
		L	W	H	
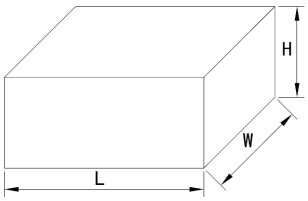	Paper carton	335	250	345	10

*4、 Packing qty (pcs/bag)

05D	07D	10D		14D			20D	
180K - 471K	180K - 511K	180K - 821K	911K - 112K	180K - 511K	561K - 112K	132K - 182K	180K - 621K	681K - 182K
1000	1000	500	400	500	400	300	250	200

Tape & Box (Ammo)	
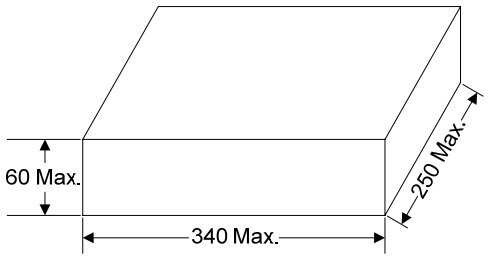	1500pcs/box (180K~391K)
	1000pcs/box (431K~751K)