Olitech Electronics Co. Ltd

Email: info@olitech-elec.com Website: www.olitech-elec.com

Lead Zinc Oxide Varistor 07D series

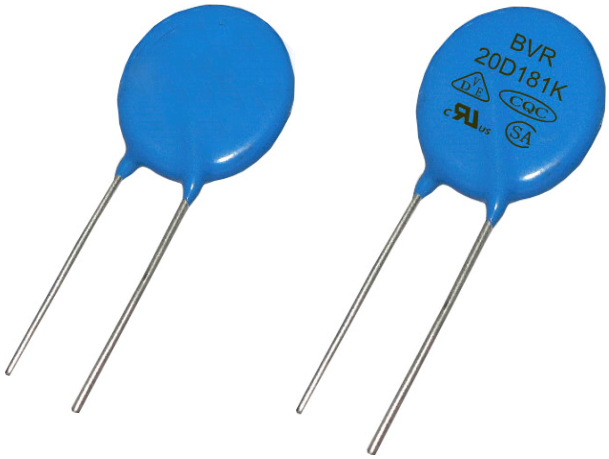

Description

The 07D series radial leaded varistors provides an ideal circuit protection solution for lower DC voltage applications by offering higher surge ratings than ever before available in such small discs.

The maximum peak surge current rating can reach up to 1.75KA(8/20 μs pulse) to protect against high peak surges, including indirect lightning strike interference, system switching transients and abnormal fast transients from the power source.

Features

- Wide operating voltage (V_{1mA}) range from 8V to 820V
- Fast responding to transient over-voltage
- Large absorbing transient energy capability
- Low clamping ratio and no follow-on current
- Safety certification: UL & VDE
- Operating Temperature：-40 ℃ ~ +85 ℃
- Storage Temperature：-40 ℃ ~ +125 ℃
- According to UL 94 V-0 standards

Applications

- Transistor, diode, IC, thyristor or triac semiconductor protection
- Surge protection in consumer electronics
- Surge protection in industrial electronics
- Surge protection in electronic home appliances, gas and pet roleum appliances
- Relay and electromagnetic valve surge absorption

Part Number Code

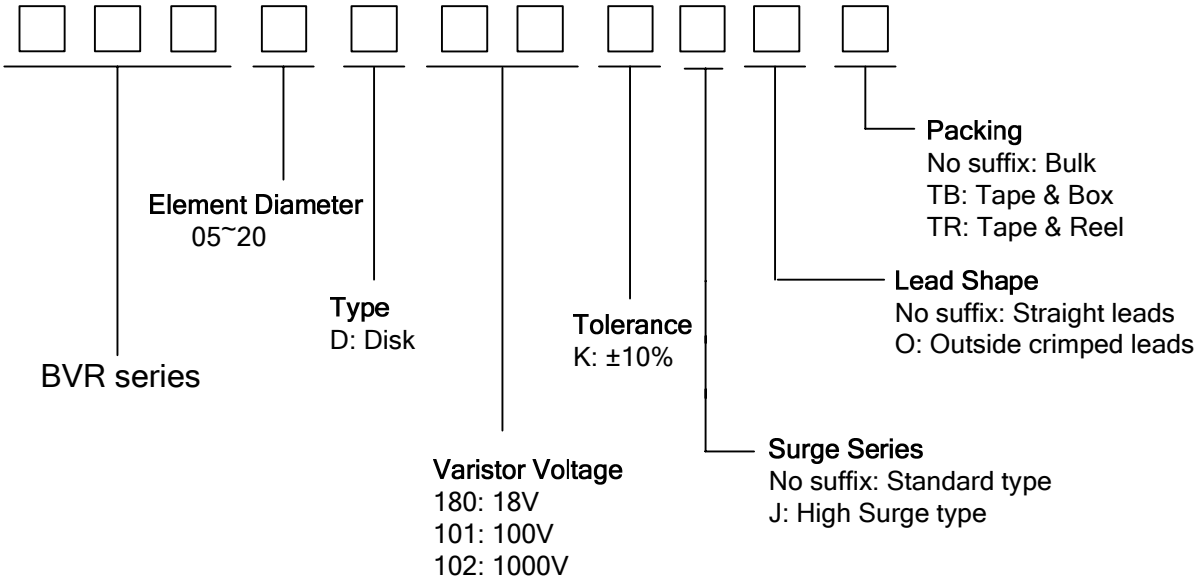

Dimensions (Pls see table)

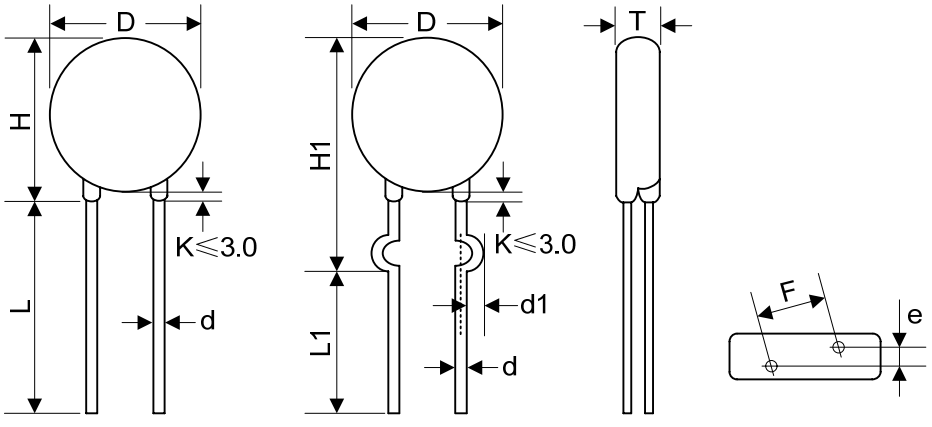

O TYPE

Table 1

Unit: mm

Symbol	Dimension
H	7.5~12.0
H1	9.0~13.5
L(min.)	20.0
L1(min.)	15.0
D	7.0~9.0
F(±0.8)	5.0
T	Table 2
e(±0.8)	Table 2
d(±0.05)	0.6
d1(±0.4)	1.2

Table 2

Unit: mm

Model	T	e	Model	T	e
180K	1.5~4.5	1.3	241K	2.1~4.6	2.0
220K	1.6~4.6	1.4	271K	2.1~4.9	2.2
270K	1.6~4.7	1.6	301K	2.2~5.0	2.3
330K	1.7~4.9	1.5	331K	2.2~5.1	2.3
390K	1.6~4.8	1.6	361K	2.4~5.2	2.5
470K	1.7~4.9	1.7	391K	2.5~5.4	2.6
560K	1.8~5.0	1.9	431K	2.7~5.7	2.8
680K	1.9~5.2	2.2	471K	2.8~6.0	3.0
820K	1.6~4.1	1.6	511K	2.9~6.2	3.2
101K	1.9~4.3	1.8	561K	3.1~6.5	3.4
121K	1.9~4.5	2.0	621K	3.3~7.1	3.7
151K	1.7~4.8	1.6	681K	3.5~7.3	4.0
181K	1.8~4.3	1.7	751K	3.8~7.0	4.1
201K	1.9~4.4	1.8	781K	3.9~7.2	4.2
221K	2.0~4.5	1.9	821K	4.1~7.5	4.4

Olitech Electronics Co. Ltd

Email: info@olitech-elec.com Website: www.olitech-elec.com

Lead Zinc Oxide Varistor 07D series

Electrical Characteristics

Type Number		Maximum Allowable voltage		Varistor Voltage	Maximum Clamping Voltage		Withstanding Surge Current				Maximum Energy (10/1000 μs)		Rated Power	Typical Capacitance (Reference)
Standard	High Surge	V_{AC} (V)	V_{DC} (V)	V1mA (V)	I_P (A)	V_C (V)	I(A) Standard		I(A) High Surge		(J) Standard	(J) High Surge	(W)	@1KHZ (pf)
							1 Time	2 Times	1 Time	2 Times				
07D180K	07D180KJ	11	14	18(15~21.6)	2.5	36	250	125	500	250	0.9	2.0	0.02	2800
07D220K	07D220KJ	14	18	22(19.5~26)	2.5	43	250	125	500	250	1.1	2.4	0.02	2300
07D270K	07D270KJ	17	22	27(24~30)	2.5	53	250	125	500	250	1.4	3.0	0.02	1800
07D330K	07D330KJ	20	26	33(29.5~36.5)	2.5	66	250	125	500	250	1.7	3.5	0.02	1500
07D390K	07D390KJ	25	31	39(35~43)	2.5	77	250	125	500	250	2.1	4.0	0.02	1300
07D470K	07D470KJ	30	38	47(42~54)	2.5	93	250	125	500	250	2.5	5.0	0.02	1100
07D560K	07D560KJ	35	45	56(50~62)	2.5	110	250	125	500	250	3.1	6.0	0.02	900
07D680K	07D680KJ	40	56	68(61~75)	2.5	135	250	125	500	250	3.6	7.0	0.02	740
07D820K	07D820KJ	50	65	82(74~90)	10	135	1200	600	1750	1250	5.5	10.0	0.25	600
07D101K	07D101KJ	60	85	100(90~110)	10	165	1200	600	1750	1250	6.5	12.0	0.25	500
07D121K	07D121KJ	75	100	120(108~132)	10	200	1200	600	1750	1250	7.8	13.0	0.25	420
07D151K	07D151KJ	95	125	150(135~165)	10	250	1200	600	1750	1250	9.7	13.0	0.25	330
07D181K	07D181KJ	115	150	180(162~198)	10	300	1200	600	1750	1250	11.7	16.0	0.25	280
07D201K	07D201KJ	130	170	200(180~220)	10	340	1200	600	1750	1250	13.0	17.0	0.25	250
07D221K	07D221KJ	140	180	220(198~242)	10	360	1200	600	1750	1250	14.0	19.0	0.25	230
07D241K	07D241KJ	150	200	240(216~264)	10	395	1200	600	1750	1250	15.0	21.0	0.25	210
07D271K	07D271KJ	175	225	270(243~297)	10	455	1200	600	1750	1250	18.0	24.0	0.25	185
07D301K	07D301KJ	190	250	300(270~330)	10	500	1200	600	1750	1250	20.0	26.0	0.25	165
07D331K	07D331KJ	210	275	330(297~363)	10	550	1200	600	1750	1250	23.0	28.0	0.25	150
07D361K	07D361KJ	230	300	360(324~396)	10	595	1200	600	1750	1250	25.0	32.0	0.25	140
07D391K	07D391KJ	250	320	390(351~429)	10	650	1200	600	1750	1250	25.0	35.0	0.25	130
07D431K	07D431KJ	275	350	430(387~473	10	710	1200	600	1750	1250	28.0	40.0	0.25	115
07D471K	07D471KJ	300	335	470(423~517)	10	775	1200	600	1750	1250	30.0	42.0	0.25	105
07D511K	07D511KJ	320	415	510(459~561)	10	845	1200	600	1750	1250	30.0	45.0	0.25	100
07D561K	07D561KJ	350	460	560(504~616)	10	925	1200	600	1750	1250	30.0	49.0	0.25	90
07D621K	07D621KJ	385	505	620(558~682)	10	1025	1200	600	1750	1250	33.0	55.0	0.25	80
07D681K	07D681KJ	420	560	680(612~748)	10	1120	1200	600	1750	1250	33.0	60.0	0.25	75
07D751K	07D751KJ	460	615	750(675~825)	10	1240	1200	600	1750	1250	67.2	65.0	0.25	70
07D781K	07D781KJ	485	640	780(702~858)	10	1290	1200	600	1750	1250	67.2	65.0	0.25	70
07D821K	07D821KJ	510	670	820(738~902)	10	1355	1200	600	1750	1250	67.2	70.0	0.25	60

Notes: 1. The tolerance of varistor voltage between 18V and 27V is more than 10%.

2. Leakage Current (@83% of V_{1mA}): IR≤50μA (180K~680K)

IR≤25μA (820K~751K)

	编号 NO.	项目 Item	性能要求 capability Requirements	说 明 及 测 试 方 法 Illustrate and test methods
电气性能（Electrical performance）	4	标准测试条件 Standard test conditions	—	除非另有规定，所有项目的测试应在以下环境条件下进行： 温度： 5～35℃，相对湿度：45～85%RH Unless otherwise stated, all items of the test should be carried out under the following environmental conditions: Temperature: 5～35 ℃, relative humidity: 45～85% RH
	5	最大持续工作电压 Maximum continuous operating voltage	交流(AC):300V_{RMS} 直流(DC):385V	压敏电阻能够长期承受的最大持续正弦交流电压有效值或最大直流电压。 Varistor can be sustained long-term maximum exposure or maximum sinusoidal RMS AC voltage DC voltage.
	6	压敏电压 Varistor voltage	U_{1mA} =423~517V	压敏电阻中流 1mA 直流电流时，压敏电阻两电极间的电压。 Varistor stream 1mA DC current, the varistor voltage between two electrodes.
	7	漏电流 Leakage current	≤ 10 μA	两端被施加最大持续直流工作电压时，流过压敏电阻的电流。 Maximum continuous DC is applied at both ends of operating voltage, the current flowing through the varistor.
	8*	电压温度系数 Voltage temperature coefficient	-0.05 %～0 %/℃	$\frac{U_{1mA}(85℃)-U_{1mA}(25℃)}{U_{1mA}(25℃)}\times\frac{1}{60}\times 100$ (%)
	9	限制电压 Clamping voltage	775V	波形为 8/20μs、峰值为 10A 的浪涌电流流入压敏电阻器时，两电极间的电压峰值。 Waveform 8/20μs, 10A peak inrush current into the varistor, the two peak voltage between the electrodes.
	编号 NO.	项目 Item	性能要求 capability Requirements	说 明 及 测 试 方 法 Illustrate and test methods
	10	最大峰值电流 Maximum peak current	1250A	压敏电阻能够承受的波形为 8/20μs 的最大浪涌电流峰值。“能够承受”指：冲击后的压敏电压 U_{1mA} 与冲击前的相比不大于±10%，且不能发生目视可见的机械损伤。 Varistor can withstand the wave to the maximum inrush current peak 8/20μs. "withstand"means: after the impact and shock U_{1mA} varistor voltage compared to no more than before ± 10%, and can not visually visible mechanical damage occurred.
	11*	额定功率 及 脉冲电流稳定性 Rated Power and Pulse current stability	0.25W and 10^4 times	在波形为 8/20μs、峰值为 100A、时间间隔为 6.88 sec、次数为 10^4 的电流脉冲群作用下，压敏电阻器能承受最大平均功率。“能够承受”指：冲击后的压敏电压 U_{1mA} 与冲击前的相比不大于±10%，且不能发生目视可见的机械损伤。 In the waveform 8/20μs, the peak for the 100 A, the time interval of 6.88 sec, 10^4 times under the current burst, varistor can withstand the maximum average power. "withstand" means : after the impact and shock U_{1mA} varistor voltage compared to no more than before ± 10%, and can not visually visible mechanical damage occurred.
	12	最大能量 Maximum energy	30J	对压敏电阻施加一次 10/1000μs 方波电流时，它能够承受最大浪涌能量。“能够承受”指：冲击后的压敏电压 U_{1mA} 与冲击前的相比不大于±10%，且不能发生目视可见的机械损伤。 Imposed on a 10/1000μs varistor square wave current, it can withstand the maximum surge energy. "withstand" means : after the impact and shock U_{1mA} varistor voltage compared to no more than before ± 10%, and can not visually visible mechanical damage occurred.
	13	电容量 Capacitance	100pF (参考值 Reference)	频率（Frequency）：1kHz±10%、 信号电平（Signal level）≤1V_{RMS} 、零偏压（Zero bias）.
环境特性(Environmental Characteristics)	14*	气候顺序 Climatic sequence	$\frac{\Delta U_{1mA}}{U_{1mA}} \le \pm 5\%$ 无明显机械损伤 not visually visible mechanical damage	IEC 68-2-4, 试验 Db 干热： (125±2℃)×16hrs, 循环湿热：一个循环(55±2℃)×24hrs、 95~100%RH 寒冷：(-40±2℃)×2hrs, 循环湿热：一次(55±2℃) ×24hrs,、95~100%RH、循环 1 次，24hrs/循环。 IEC 68-2-4, Test Db Dry Heat: (125 ± 2 ℃) × 16hrs, Damp heat, cyclic: a loop (55 ± 2 ℃) × 24hrs, 95 ~ 100% RH Cold: (-40 ± 2 ℃) × 2hrs, Damp heat, cyclic: one (55 ± 2 ℃) × 24hrs,, 95 ~ 100% RH, the remaining 1 cycles, 24hrs / cycle.

	编号 NO.	项目 Item	性能要求 capability Requirements	说 明 及 测 试 方 法 Illustrate and test methods
	15*	稳态湿热 Steady-state heat	$\frac{\Delta U_{1mA}}{U_{1mA}} \le \pm 5\%$ 无明显机械损伤 not visually visible mechanical damage	IEC68-2-3 温度/时间：(40±2℃)/500hrs、湿度：90~95%RH。 IEC68-2-3 Temperature / time: (40 ± 2 ℃) / 500hrs, Humidity: 90 ~ 95% RH.
	16*	温度快速变化 Rapid change of temperature	$\frac{\Delta U_{1mA}}{U_{1mA}} \le \pm 5\%$ 无明显机械损伤 not visually visible mechanical damage	IEC 68-2-14, 试验 Na T_A=- 40℃，T_B= +125℃；共五个循环，每个极限温度下放置 30 分钟。 IEC 68-2-14, Test Na T_A=- 40℃，T_B= +125℃； a total of five cycles, each extreme temperature for 30 minutes.
	17*	上限类别温度耐久性 Durability of Upper category temperature	$\frac{\Delta U_{1mA}}{U_{1mA}} \le \pm 10\%$ 无明显机械损伤 not visually visible mechanical damage	IEC 68-2-2 温度：125℃±2℃、时间：1000hrs。 电压：最大持续工作电压。 IEC 68-2-2 Temperature: 125 ℃ ± 2 ℃, time: 1000hrs. Voltage: The maximum continuous operating voltage.
	18*	湿热环境耐久性 Durability of hot and humid environment	$\frac{\Delta U_{1mA}}{U_{1mA}} \le \pm 10\%$ 无明显机械损伤 not visually visible mechanical damage	IEC68-2-3 温度：40℃±2℃、时间：500hrs、湿度：90~95%RH。 电压：最大持续工作电压的 10%。 IEC68-2-3 Temperature: 40 ℃ ± 2 ℃, time: 500hrs, Humidity: 90 ~ 95% RH. Voltage: The 10% of the maximum continuous operating voltage (AC).
机械特性(Mechanical Characteristics)	19*	振动 Vibration	$\frac{\Delta U_{1mA}}{U_{1mA}} \le \pm 5\%$ 无明显机械损伤 not visually visible mechanical damage	IEC68-2-6, 试验 Fc 方法 B4 频率范围：10 Hz～55 Hz、振幅：0.75mm 或加速度 98 m/s^2 总持续时间：6hrs(三个方向，每方向各 2hrs)。 IEC68-2-6, Fc test method B4 Frequency range: 10 Hz ~ 55 Hz, amplitude: 0.75mm or acceleration 98 m/s^2 total duration: 6hrs (three directions, each direction of each 2hrs).
	20*	冲击 Impact	$\frac{\Delta U_{1mA}}{U_{1mA}} \le \pm 5\%$ 无明显机械损伤 not visually visible mechanical damage	IEC 68-2-27, Test Ea 脉冲波形：半正弦波、加速度：490m/s^2 脉冲宽度：11ms，三个方向，每方向各 6 次。 IEC 68-2-27, Test Ea Pulse waveform: half sine, acceleration: 490 m/s^2 Pulse width: 11ms, three directions, each direction of the 6 times.
	21*	可焊性 Solderability	浸渍部分的 95%被焊锡覆盖 95% of dipping part of the solder coverage	IEC 68-2-20, 试验 Ta 方法 1 槽温：235±5℃ 浸渍时间：2±0.5sec IEC 68-2-20, Test Ta method 1 Bath temperature: 235 ± 5 ℃ Soaking time: 2 ± 0.5sec

	编号 NO.	项目 Item	性能要求 capability Requirements	说 明 及 测 试 方 法 Illustrate and test methods
	22*	耐焊接性 Soldering endurance	$\frac{\Delta U_{1mA}}{U_{1mA}} \le \pm 5\%$ 无明显机械损伤 not visually visible mechanical damage	IEC 68-2-20, 试验 Tb 方法 1A 锡温： 260℃、持续时间：5sec IEC 68-2-20, Test Tb Method 1A Solder temperature: 260 ℃, duration: 5sec
	23*	引出端强度 Terminal Strength	$\frac{\Delta U_{1mA}}{U_{1mA}} \le \pm 5\%$ 无明显机械损伤 not visually visible mechanical damage	IEC68-2-21, 试验 Ua 拉伸— 力量： 10 N (ø 0.6 和 ø 0.8mm 引线)、 20N(ø 1.0mm 引线) 持续时间： 10 sec. 弯折— 力量： 5 N (ø 0.6 和 ø 0.8mm 引线)、 10N(ø 1.0mm 引线) 弯折次数：2 次 IEC68-2-21, Test Ua Stretch - Strength: 10 N (ø 0.6 and ø 0.8mm lead), 20N (ø 1.0mm lead) Duration: 10 sec. Bending - Strength: 5 N (ø 0.6 and ø 0.8mm lead), 10N (ø 1.0mm lead) Bending: 2 times
总体特性(Total Characteristics)	24*	使用温度范围 Operating temperature range	-40℃ ～ + 125℃	压敏电阻无须降额使用的温度范围 Varistor without derating temperature range
	25*	贮存温度范围 Storage temperature range	-40℃ ～ + 125℃	压敏电阻无负载情况下 Varistors under no load
	26	绝缘耐压 Insulation	≥2500VAC	压敏电阻的电极引线与其包封层表面之间，1 min。 Varistor electrode lead between the surface and its encapsulation, 1 min.

伏安特性曲线

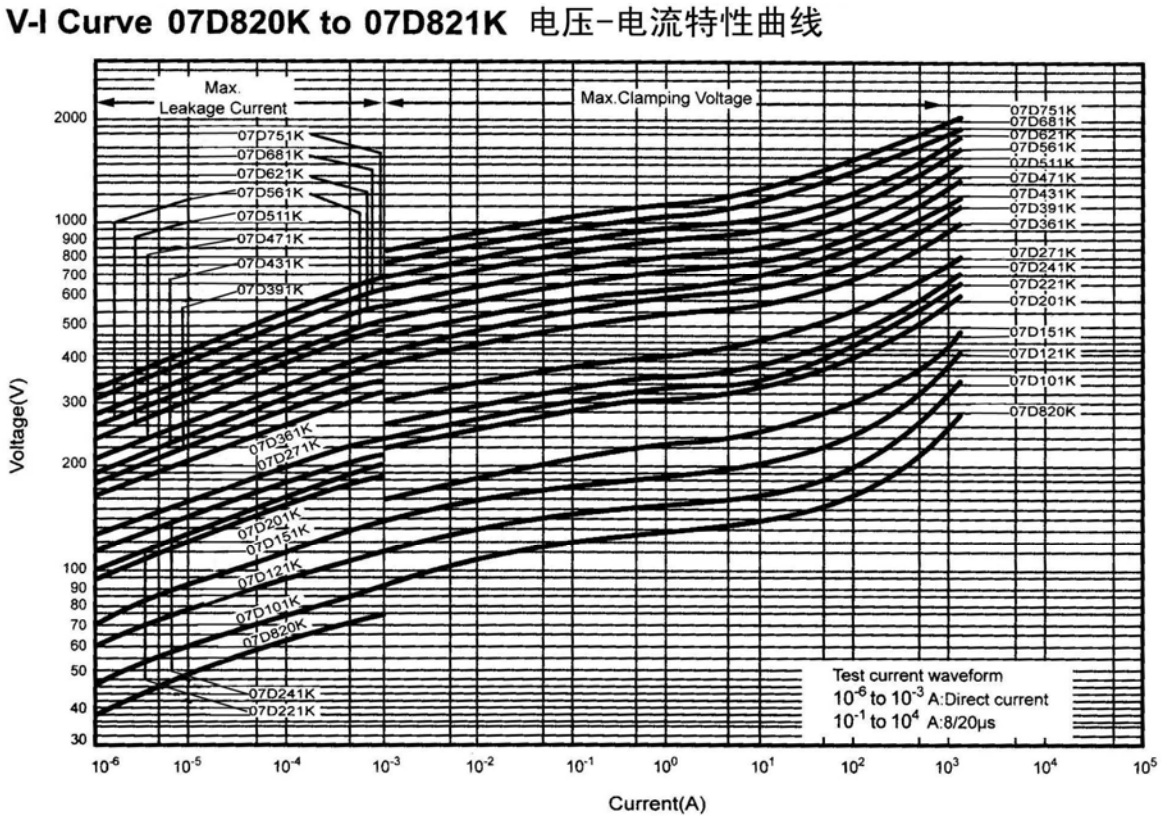

温度降额曲线

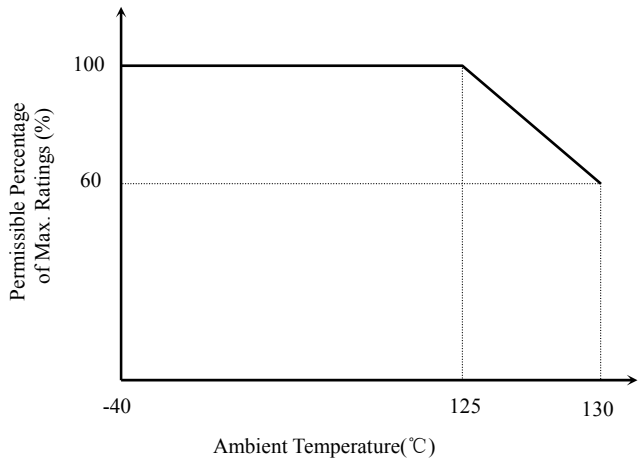

脉冲电流降额曲线

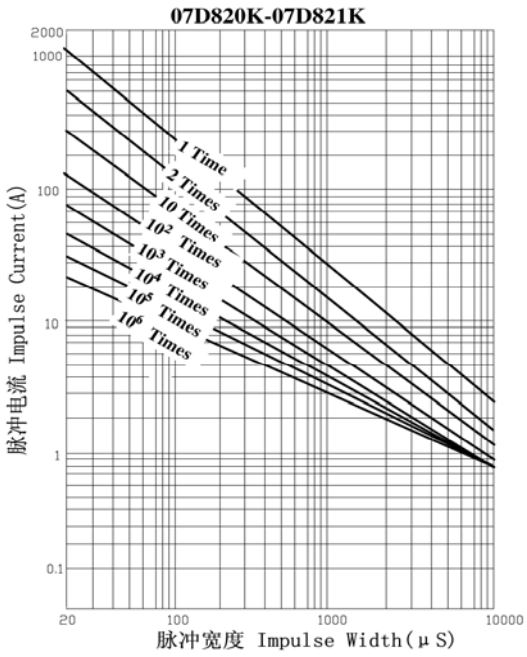

注： 编号带有星号(*)的项目属可靠性试验。

Note: The numbers with an asterisk (*) project is a reliability test.

Olitech Electronics Co. Ltd

Email: info@olitech-elec.com Website: www.olitech-elec.com

Package Bulk packing

1、Inner bag packing

Outlook	Bag material	Size (mm)		Packing Qty (pcs)
		L	W	
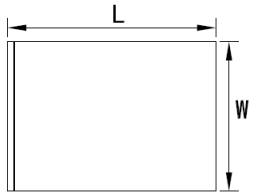	Plastic bag	210	200	*

2、 Inner box packing

Outlook		(mm)			(Box)
		L	W	H	
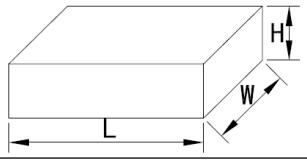	Paper box	245	165	67	2

3、 Outside carton packing

Outlook	Material	Size (mm)			Packing Qty (Carton)
		L	W	H	
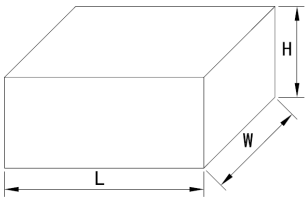	Paper carton	335	250	345	10

*4、 Packing qty (pcs/bag)

05D	07D	10D		14D			20D	
180K - 471K	180K - 511K	180K - 821K	911K - 112K	180K - 511K	561K - 112K	132K - 182K	180K - 621K	681K - 182K
1000	1000	500	400	500	400	300	250	200

Tape & Box (Ammo)	
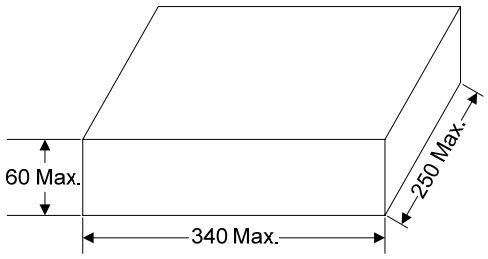	1500pcs/box (180K~391K)
	1000pcs/box (431K~751K)