Olitech Electronics Co. Ltd

Email: info@olitech-elec.com Website: www.olitech-elec.com

Lead Zinc Oxide Varistor 14D series

Description

The 14D series radial leaded varistors provides an ideal circuit protection solution for lower DC voltage applications by offering higher surge ratings than ever before available in such small discs.

The maximum peak surge current rating can reach up to 6.0 KA(8/20 μs pulse) to protect against high peak surges, including indirect lightning strike interference, system switching transients and abnormal fast transients from the power source.

Features

- Wide operating voltage (V_{1mA}) range from 8V to 1800V
- Fast responding to transient over-voltage
- Large absorbing transient energy capability
- Low clamping ratio and no follow-on current
- Safety certification: UL & VDE
- Operating Temperature：-40 ℃ ~ +85 ℃
- Storage Temperature：-40 ℃ ~ +125 ℃
- According to UL 94 V-0 standards

Applications

- Transistor, diode, IC, thyristor or triac semiconductor protection
- Surge protection in consumer electronics
- Surge protection in industrial electronics
- Surge protection in electronic home appliances, gas and pet roleum appliances
- Relay and electromagnetic valve surge absorption

Part Number Code

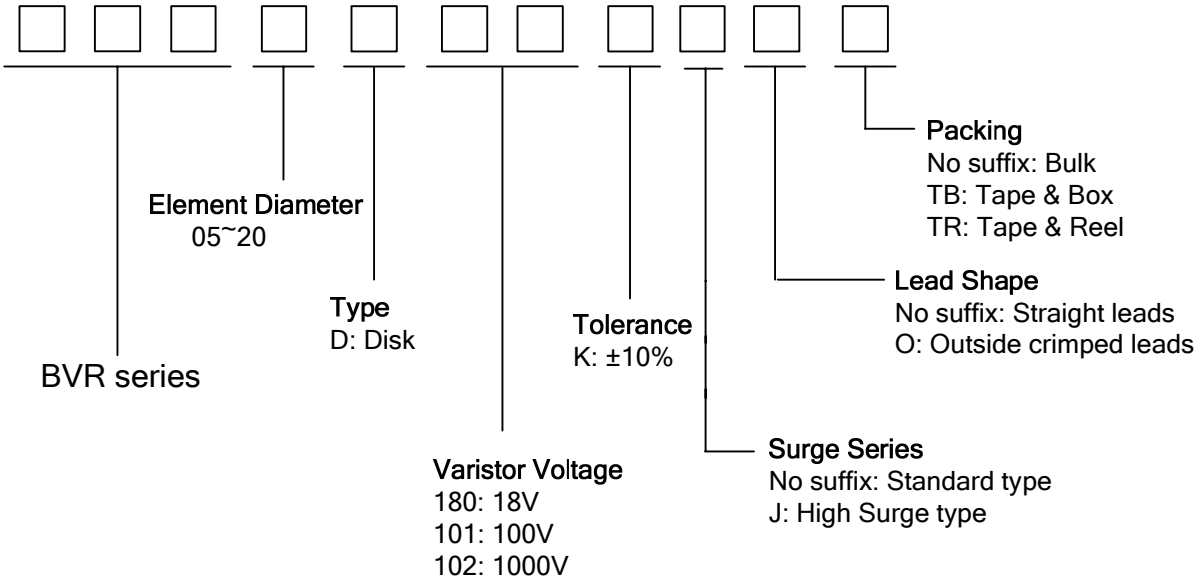

Olitech Electronics Co. Ltd

Email: info@olitech-elec.com Website: www.olitech-elec.com

Lead Zinc Oxide Varistor 14D series

Dimensions (Pls see table)

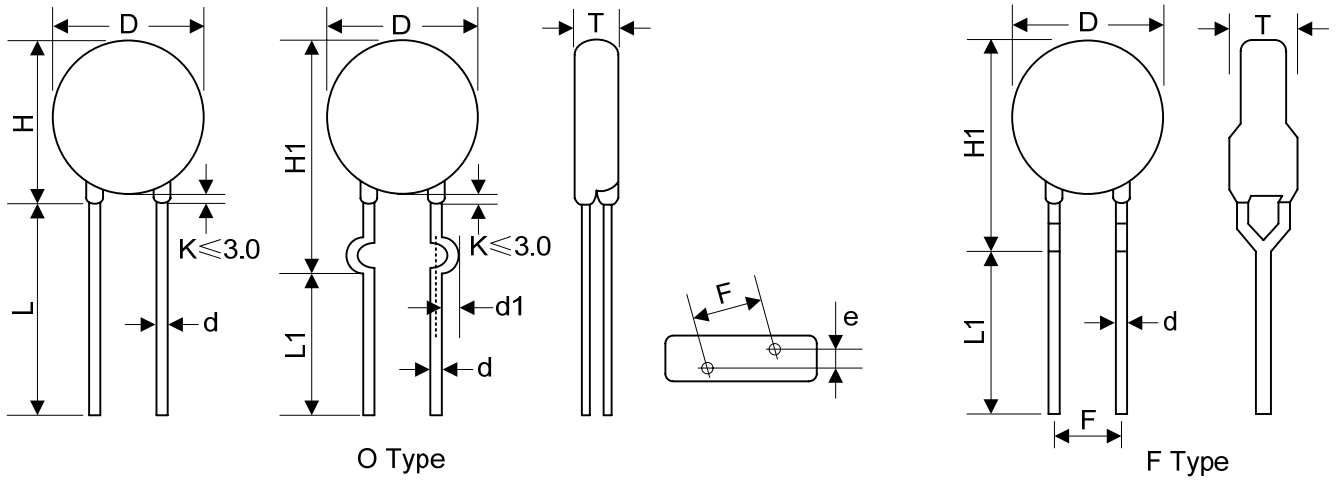

Table 1 Unit: mm	
Symbol	Dimension
H	14.5~20.0
H1	17.0~21.0
L(min.)	20.0
L1(min.)	15.0
D	14.0~16.5
F(±0.8)	7.5
T	Table 2
e(±0.8)	Table 2
d(±0.05)	0.8
d1(±0.4)	1.4

Table 2 Unit: mm

Model	T	e	Model	T	e
180K	2.0~3.9	1.5	361K	2.9~5.2	2.7
220K	2.1~4.0	1.6	391K	3.0~5.4	2.8
270K	2.1~4.1	1.8	431K	3.2~5.6	3.0
330K	2.2~4.3	1.7	471K	3.3~5.8	3.2
390K	2.1~4.1	1.8	511K	3.4~6.1	3.4
470K	2.2~4.3	1.9	561K	3.6~6.4	3.6
560K	2.3~4.6	2.1	621K	3.8~6.8	3.9
680K	2.4~4.8	2.4	681K	4.0~7.1	4.2
820K	2.1~4.1	1.8	751K	4.3~7.2	4.3
101K	2.4~4.2	2.0	781K	4.4~7.3	4.4
121K	2.4~4.4	2.2	821K	4.6~7.5	4.6
151K	2.2~4.1	1.8	911K	4.8~7.5	5.0
181K	2.3~4.2	1.9	102K	5.4~8.0	5.0
201K	2.4~4.3	2.0	112K	5.8~8.5	5.4
221K	2.5~4.4	2.1	122K	5.9~9.0	5.8
241K	2.6~4.5	2.2	142K	6.9~10.5	6.6
271K	2.6~4.6	2.4	162K	7.4~11.0	7.4
301K	2.7~4.6	2.5	182K	7.6~12.0	8.2
331K	2.7~5.0	2.5			

Olitech Electronics Co. Ltd

Email: info@olitech-elec.com Website: www.olitech-elec.com

Lead Zinc Oxide Varistor 14D series

Electrical Characteristics

Type Number		Maximum Allowable voltage		Varistor Voltage	Maximum Clamping Voltage		Withstanding Surge Current				Maximum Energy (10/1000μs)		Rated Power	Typical Capacitance (Reference)
Standard	High Surge	V_{AC} (V)	V_{DC} (V)	V1mA (V)	I_P (A)	V_C (V)	I(A) Standard 1 Time	I(A) Standard 2 Times	I(A) High Surge 1 Time	I(A) High Surge 2 Times	(J) Standard	(J) High Surge	(W)	@1KHZ (pf)
14D180K	14D180KJ	11	14	18(15~21.6)	10	36	1000	500	2000	1000	4.0	7.0	0.1	11100
14D220K	14D220KJ	14	18	22(19.5~26)	10	43	1000	500	2000	1000	5.0	8.0	0.1	9100
14D270K	14D270KJ	17	22	27(24~30)	10	53	1000	500	2000	1000	6.0	10.0	0.1	7400
14D330K	14D330KJ	20	26	33(29.5~36.5)	10	66	1000	500	2000	1000	7.5	12.0	0.1	6100
14D390K	14D390KJ	25	31	39(35~43)	10	77	1000	500	2000	1000	8.6	13.0	0.1	5100
14D470K	14D470KJ	30	38	47(42~54)	10	93	1000	500	2000	1000	10.0	17.0	0.1	4300
14D560K	14D560KJ	35	45	56(50~62)	10	100	1000	500	2000	1000	11.0	20.0	0.1	3600
14D680K	14D680KJ	40	56	68(61~75)	10	135	1000	500	2000	1000	14.0	24.0	0.1	2900
14D820K	14D820KJ	50	65	82(74~90)	50	135	4500	2500	6000	5000	22.0	27.0	0.6	2400
14D101K	14D101KJ	60	85	100(90~110)	50	165	4500	2500	6000	5000	28.0	33.0	0.6	2000
14D121K	14D121KJ	75	100	120(108~132)	50	200	4500	2500	6000	5000	32.0	40.0	0.6	1700
14D151K	14D151KJ	95	125	150(135~165)	50	250	4500	2500	6000	5000	40.0	53.0	0.6	1300
14D181K	14D181KJ	115	150	180(162~198)	50	300	4500	2500	6000	5000	50.0	60.0	0.6	1100
14D201K	14D201KJ	130	170	200(180~220)	50	340	4500	2500	6000	5000	57.0	70.0	0.6	1000
14D221K	14D221KJ	140	180	220(198~242)	50	360	4500	2500	6000	5000	60.0	78.0	0.6	900
14D241K	14D241KJ	150	200	240(216~264)	50	395	4500	2500	6000	5000	63.0	84.0	0.6	830
14D271K	14D271KJ	175	225	270(243~297)	50	455	4500	2500	6000	5000	70.0	99.0	0.6	740
14D301K	14D301KJ	190	250	300(270~330)	50	500	4500	2500	6000	5000	77.0	108	0.6	670
14D331K	14D331KJ	210	275	330(297~363)	50	550	4500	2500	6000	5000	85.0	115	0.6	610
14D361K	14D361KJ	230	300	360(324~396)	50	595	4500	2500	6000	5000	93.0	130	0.6	560
14D391K	14D391KJ	250	320	390(351~429)	50	650	4500	2500	6000	5000	100	140	0.6	510
14D431K	14D431KJ	275	350	430(387~473	50	710	4500	2500	6000	5000	115	155	0.6	460
14D471K	14D471KJ	300	335	470(423~517)	50	775	4500	2500	6000	5000	125	175	0.6	430
14D511K	14D511KJ	320	415	510(459~561)	50	845	4500	2500	6000	5000	125	180	0.6	390
14D561K	14D561KJ	350	460	560(504~616)	50	925	4500	2500	6000	5000	125	185	0.6	360
14D621K	14D621KJ	385	505	620(558~682)	50	1025	4500	2500	6000	5000	125	190	0.6	320
14D681K	14D681KJ	420	560	680(612~748)	50	1120	4500	2500	6000	5000	130	200	0.6	290
14D751K	14D751KJ	460	615	750(675~825)	50	1240	4500	2500	6000	5000	143	210	0.6	270
14D781K	14D781KJ	485	640	780(702~858)	50	1290	4500	2500	6000	5000	148	220	0.6	260
14D821K	14D821KJ	510	670	820(738~902)	50	1355	4500	2500	6000	5000	157	235	0.6	240
14D911K	14D911KJ	550	745	910(819~1001)	50	1500	4500	2500	6000	5000	175	255	0.6	220
14D102K	14D102KJ	625	825	1000(900~1100)	50	1650	4500	2500	6000	5000	190	280	0.6	200
14D112K	14D112KJ	680	895	1100(990~1210)	50	1814	4500	2500	6000	5000	213	310	0.6	180
14D122K	14D122KJ	750	990	1200(1080~1320)	50	1980	4500	2500	6000	5000	213	310	0.6	150
14D182K	14D182KJ	1000	1465	1800(1620~1980)	50	2970	4500	2500	6000	5000	250	335	0.6	130

Lead Zinc Oxide Varistor 14D series

	编号 NO.	项目 Item	性能要求 capability Requirements	说明及测试方法 Illustrate and test methods
电气性能(Electrical performance)	6	标准测试条件 Standard test conditions	—	除非另有规定，所有项目的测试应在以下环境条件下进行：温度： 5～35℃，相对湿度：45～85%RH Unless otherwise stated, all items of the test should be carried out under the following environmental conditions: Temperature: 5～35 ℃, relative humidity: 45～85% RH
	7	最大持续工作电压 Maximum continuous operating voltage	交流:195V_{RMS} 直流: 250 V	压敏电阻能够长期承受的最大持续正弦交流电压有效值或最大直流电压。 Varistor can be sustained long-term maximum exposure or maximum sinusoidal RMS AC voltage DC voltage.
	8	压敏电压 Varistor voltage	U_{1mA} =270~330V	压敏电阻中流 1mA 直流电流时，压敏电阻两电极间的电压。 Varistor stream 1mA DC current, the varistor voltage between two electrodes.
	9	漏电流 Leakage current	≤ 10μA	两端被施加最大持续直流工作电压时，流过压敏电阻的电流。 Maximum continuous DC is applied at both ends of operating voltage, the current flowing through the varistor.
	10*	电压温度系数 Voltage temperature coefficient	-0.05 %/℃ max	$\frac{U_{1mA}(85℃)-U_{1mA}(25℃)}{U_{1mA}(25℃)}\times\frac{1}{60}\times 100$ (%)
	11	限制电压 Clamping voltage	500V	波形为 8/20μs、峰值为 50A 的浪涌电流流入压敏电阻器时，两电极间的电压峰值。 Waveform 8/20μs, 50A peak inrush current into the varistor, the two peak voltage between the electrodes.

	编号 NO.	项目 Item	性能要求 capability Requirements	说明及测试方法 Illustrate and test methods
	12	最大峰值电流 Maximum peak current	4500A	压敏电阻能够承受的波形为 8/20μs 的最大浪涌电流峰值。“能够承受”指：冲击后的压敏电压 U_{1mA} 与冲击前的相比不大于±10%，且不能发生目视可见的机械损伤。 Varistor can withstand the wave to the maximum inrush current peak 8/20μs. "withstand"means: after the impact and shock U_{1mA} varistor voltage compared to no more than before ± 10%, and can not visually visible mechanical damage occurred.
	13*	额定功率 及 脉冲电流稳定性 Rated Power and Pulse current stability	0.6W and 10^4 times	在波形为 8/20μs、峰值为 200A、时间间隔为 3.7sec、次数为 10^4 的电流脉冲群作用下，压敏电阻器能承受最大平均功率。“能够承受”指：冲击后的压敏电压 U_{1mA} 与冲击前的相比不大于±10%，且不能发生目视可见的机械损伤。 In the waveform 8/20μs, the peak for the 200A, the time interval of 3.7 sec, 10^4 times under the current burst, varistor can withstand the maximum average power. "withstand" means : after the impact and shock U_{1mA} varistor voltage compared to no more than before ± 10%, and can not visually visible mechanical damage occurred.
	14	最大能量 Maximum energy	78J	对压敏电阻施加一次 10/1000μs 方波电流时，它能够承受最大浪涌能量。“能够承受”指：冲击后的压敏电压 U_{1mA} 与冲击前的相比不大于±10%，且不能发生目视可见的机械损伤。 Imposed on a 10/1000μs varistor square wave current, it can withstand the maximum surge energy. "withstand" means : after the impact and shockU_{1mA} varistor voltage compared to no more than before ± 10%, and can not visually visible mechanical damage occurred.
	15	电容量 Capacitance	480pF (参考值 Reference)	频率（Frequency）：1kHz±10%、 信号电平（Signal level）≤1V_{RMS} 、零偏压（Zero bias）.
环境特性(Environmental Characteristics)	16*	气候顺序 Climatic sequence	$\frac{\Delta U_{1mA}}{U_{1mA}} \le \pm 5\%$ 无明显机械损伤 not visually visible mechanical damage	IEC 68-2-4, 试验 Db 干热： (85±2℃)×16hrs, 循环湿热：一个循环(55±2℃)×24hrs、 95~100%RH 寒冷：(-40±2℃)×2hrs, 循环湿热：一次(55±2℃) ×24hrs,、95~100%RH、剩余的循环 1 次， 24hrs/循环。 IEC 68-2-4, Test Db Dry Heat: (85 ± 2 ℃) × 16hrs, Damp heat, cyclic: a loop (55 ± 2 ℃) × 24hrs, 95 ~ 100% RH Cold: (-40 ± 2 ℃) × 2hrs, Damp heat, cyclic: one (55 ± 2 ℃) × 24hrs,, 95 ~ 100% RH, the remaining 1 cycles, 24hrs / cycle.
	17*	温度快速变化 Rapid change of temperature	$\frac{\Delta U_{1mA}}{U_{1mA}} \le \pm 5\%$ 无明显机械损伤 not visually visible mechanical damage	IEC 68-2-14, 试验 Na T_A=- 40℃，T_B= +85℃；共五个循环，每个极限温度下放置 30 分钟。 IEC 68-2-14, Test Na T_A=- 40℃，T_B= +85℃； a total of five cycles, each extreme temperature for 30 minutes.

Lead Zinc Oxide Varistor 14D series

	编号 NO.	项目 Item	性能要求 capability Requirements	说明及测试方法 Illustrate and test methods
	18*	上限类别温度耐久性 Durability of Upper category temperature	$\frac{\Delta U_{1mA}}{U_{1mA}} \le \pm 10\%$ 无明显机械损伤 not visually visible mechanical damage	IEC 68-2-2 温度：85℃±2℃、时间：1000hrs。 电压：最大持续工作电压。 IEC 68-2-2 Temperature: 85 ℃ ± 2 ℃, time: 1000hrs. Voltage: The maximum continuous operating voltage.
	19*	稳态湿热 Steady-state heat	$\frac{\Delta U_{1mA}}{U_{1mA}} \le \pm 10\%$ 无明显机械损伤 not visually visible mechanical damage	IEC68-2-3 温度 40℃±2℃、时间：500hrs、湿度：90~95%RH。 电压：最大持续工作电压（交流）的 10%。 IEC68-2-3 Temperature: 40 ℃ ± 2 ℃, time: 500hrs, Humidity: 90 ~ 95% RH. Voltage: 10% of the maximum continuous operating voltage.
机械特性(Mechanical Characteristics)	20*	振动 Vibration	$\frac{\Delta U_{1mA}}{U_{1mA}} \le \pm 5\%$ 无明显机械损伤 not visually visible mechanical damage	IEC68-2-6, 试验 Fc 方法 B4 频率范围：10 Hz～55 Hz、振幅：0.75mm 或加速度 98 m/s^2 总持续时间：6hrs(三个方向，每方向各 2hrs)。 IEC68-2-6, Fc test method B4 Frequency range: 10 Hz ~ 55 Hz, amplitude: 0.75mm or acceleration 98 m/s^2 total duration: 6hrs (three directions, each direction of each 2hrs).
	21*	冲击 Impact	$\frac{\Delta U_{1mA}}{U_{1mA}} \le \pm 5\%$ 无明显机械损伤 not visually visible mechanical damage	IEC 68-2-27, Test Ea 脉冲波形：半正弦波、加速度：490m/s^2 脉冲宽度：11ms，三个方向，每方向各 6 次。 IEC 68-2-27, Test Ea Pulse waveform: half sine, acceleration: 490 m/s^2 Pulse width: 11ms, three directions, each direction of the 6 times.
	22*	可焊性 Solderability	浸渍部分的 95%被焊锡覆盖 95% of dipping part of the solder coverage	IEC 68-2-20, 试验 Ta 方法 1 槽温：235±5℃ 浸渍时间：2±0.5sec IEC 68-2-20, Test Ta method 1 Bath temperature: 235 ± 5 ℃ Soaking time: 2 ± 0.5sec
	23*	耐焊接性 Soldering endurance	$\frac{\Delta U_{1mA}}{U_{1mA}} \le \pm 5\%$ 无明显机械损伤 not visually visible mechanical damage	IEC 68-2-20, 试验 Tb 方法 1A 锡温： 260℃、持续时间：5sec IEC 68-2-20, Test Tb Method 1A Solder temperature: 260 ℃, duration: 5sec

	编号 NO.	项目 Item	性能要求 capability Requirements	说明及测试方法 Illustrate and test methods
	24*	引出端强度 Terminal Strength	$\frac{\Delta U_{1mA}}{U_{1mA}} \le \pm 5\%$ 无明显机械损伤 not visually visible mechanical damage	IEC68-2-21, 试验 Ua 拉伸－ 力量： 10 N (ø 0.6 和 ø 0.8mm 引线)、 20N(ø 1.0mm 引线) 持续时间： 10 sec. 弯折－ 力量： 5 N (ø 0.6 和 ø 0.8mm 引线)、 10N(ø 1.0mm 引线) 弯折次数：2 次 IEC68-2-21, Test Ua Stretch - Strength: 10 N (ø 0.6 and ø 0.8mm lead), 20N (ø 1.0mm lead) Duration: 10 sec. Bending - Strength: 5 N (ø 0.6 and ø 0.8mm lead), 10N (ø 1.0mm lead) Bending: 2 times
总体特性(Total Characteristics)	25*	使用温度范围 Operating temperature range	-40℃ ～ + 85℃	压敏电阻无须降额使用的温度范围 Varistor without derating temperature range
	26*	贮存温度范围 Storage temperature range	-40℃ ～ + 125℃	压敏电阻无负载情况下 Varistors under no load
	27*	绝缘耐压 Insulation	⩾2500VAC	压敏电阻的电极引线与其包封层表面之间，1 min。 Varistor electrode lead between the surface and its encapsulation, 1 min.

注： 编号带有星号(*)的项目属可靠性试验。

Note: The numbers with an asterisk (*) project is a reliability test.

Olitech Electronics Co. Ltd

Email: info@olitech-elec.com Website: www.olitech-elec.com

Package Bulk packing

1、Inner bag packing

Outlook	Bag material	Size (mm)		Packing Qty (pcs)
		L	W	
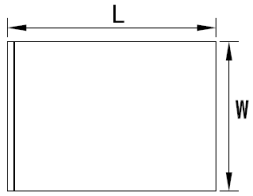	Plastic bag	210	200	*

2、 Inner box packing

Outlook		(mm)			(Box)
		L	W	H	
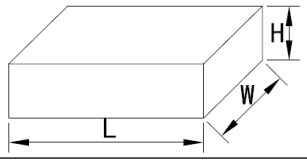	Paper box	245	165	67	2

3、 Outside carton packing

Outlook	Material	Size (mm)			Packing Qty (Carton)
		L	W	H	
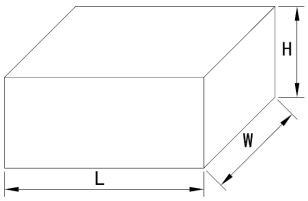	Paper carton	335	250	345	10

*4、 Packing qty (pcs/bag)

05D	07D	10D		14D			20D	
180K - 471K	180K - 511K	180K - 821K	911K - 112K	180K - 511K	561K - 112K	132K - 182K	180K - 621K	681K - 182K
1000	1000	500	400	500	400	300	250	200

Tape & Box (Ammo)	
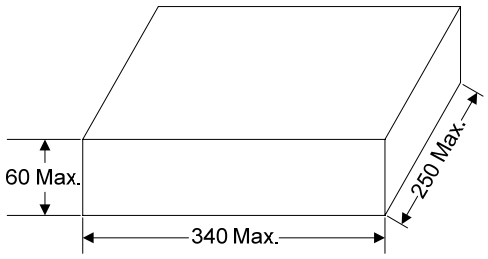	1500pcs/box (180K~391K)
	1000pcs/box (431K~751K)